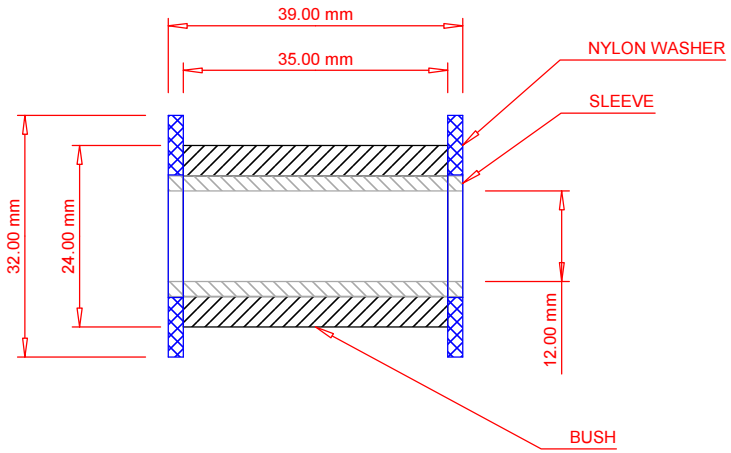

BUSH		
1.	MATERIAL	POLYURETHANE SHORE A 95
2.	COLOUR	BLACK
3.	BORE FINISH	KNURLED BORE
4.	KIT QUANTITY	1
SLEEVE		
1.	MATERIAL	STAINLESS STEEL
2.	LENGTH	39MM
3.	BORE	12MM
4.	KIT QUANTITY	1
TUBE & MOUNTING		
1.	TO SUIT BORE	15/16" , 23.8MM TO 23.95MM
2.	TO SUIT WIDTH	35MM
3.	TO SUIT MOUNTING LENGTH	39MM
4.		
WASHER		
1.	MATERIAL	NYLON
2.	DIAMETER	32MM
3.	THICKNESS	2MM
4.	KIT QUANTITY	2

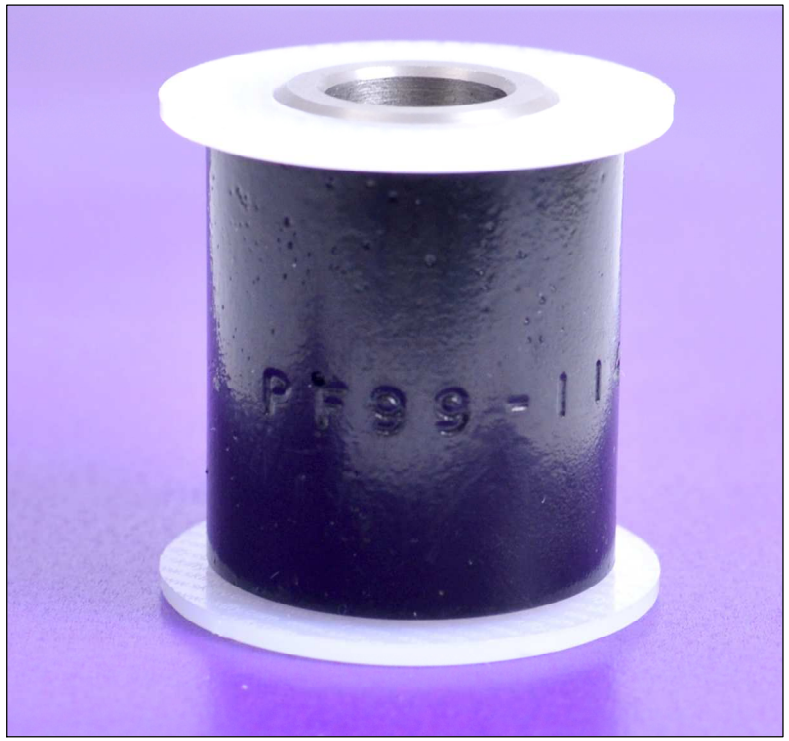

No.	REVISION	BY	CHKD	DATE
0	ORIGINAL ISSUE	P.S.		29/6/12

DESCRIPTION
KIT CAR RANGE
WESTFIELD

© COPYRIGHT. ALL RIGHTS RESERVED
THIS DRAWING IS STRICTLY CONFIDENTIAL AND MUST NOT BE COPIED, REPRODUCED OR ADAPTED, NOR MAY ARTICLES BE MANUFACTURED IN ACCORDANCE WITH THE DRAWING WITHOUT PRIOR WRITTEN PERMISSION OF POWERFLEX.

POWERFLEX
EPTG LTD

MATERIAL: POLYURETHANE SHORE A 95
DRAWING No.: PF99-116
REV: 0